Rev	Revision note	Created by	Checked by	Approved by	Date
0	Released	PUNNAIDUPE	LNCMCCUMMA	CLTWATERMA	2024-01-05
1	Change Spray Nozzle Size & Pipe Length	LNCMCCUMMA	LNCMCCUMMA	CLTWATERMA	2024-06-28

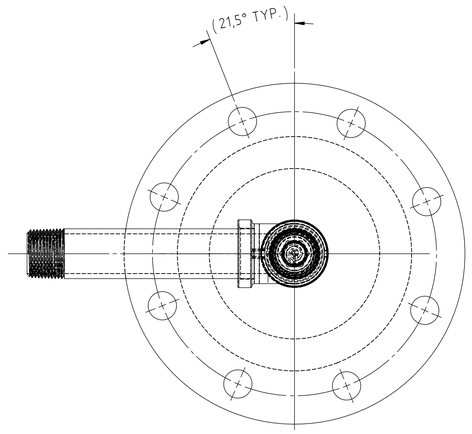

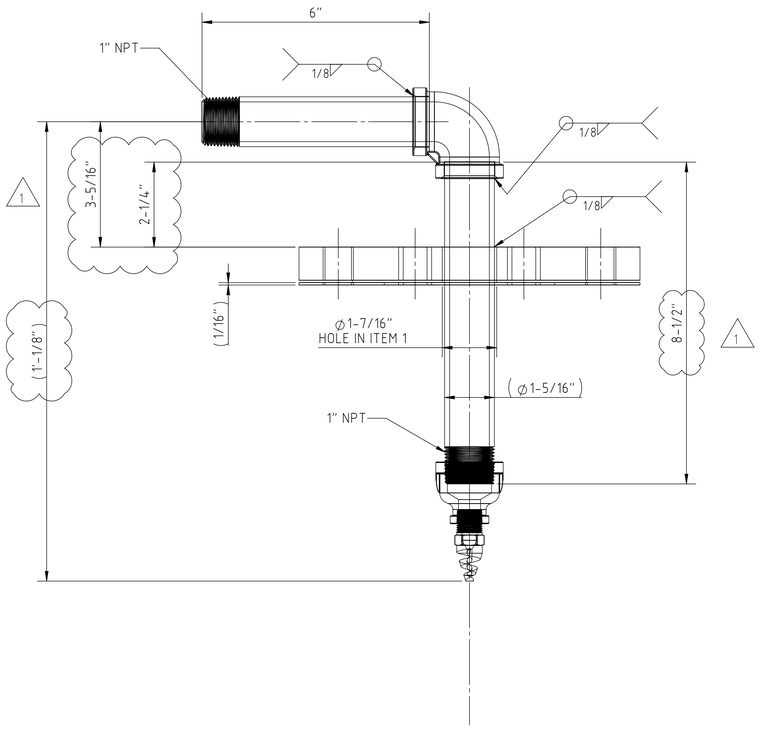

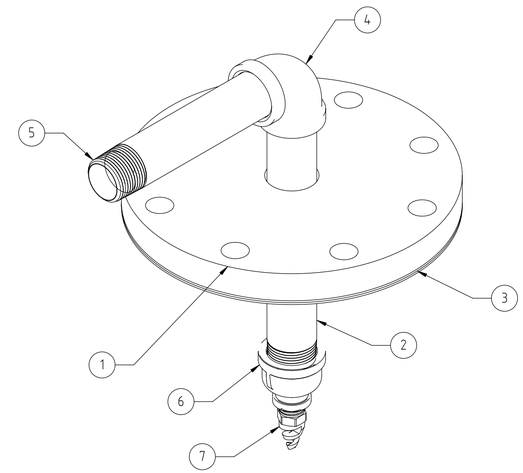

POWP118084

1

NOTES:
1. MARK ASSEMBLY WITH ITEM ID PRIOR TO SHIPMENT

No	Description	Doc. Id.	Material	Item ID	DIMENSIONS	Weight	Qty	Ship Loose
7	Spray Nozzle		AISI 316		3/8" NPT	0.011	1	
6	Reducer		AISI 304L		1" x 3/8" NPT	0.39	1	
5	Pipe	-	AISI 304L		1" SCH 40S (.133) x 6" LG.	0.80	1	
4	Elbow	-	AISI 304L		1" Elbow 90° (4335T34)	0.80	1	
3	Gasket	-	PTFE		9" O.D x 4 1/2" I.D x 1/16	0.10	1	
2	Pipe	-	AISI 304L		1" SCH 40S (.133) x 8 1/2" LG.	1.16	1	
1	Blind Flange	-	AISI 304L		4" Flange - ANSI 150#	15.30	1	

Production Method: General Tolerances | Welding Symbols | Assembly Dwg | Weight: 19 lb | Volume

This document is the exclusive intellectual property of Valmet Corporation and/or its subsidiaries and is furnished solely for operating and maintaining the specific project. Re-use of the document for any other project or purpose is prohibited. The document or the information shall not be reproduced, copied or disclosed to a third party without prior written consent of the company.

Size: D
Scale: 1:2

MANUFACTURING PER USSTANDARD-00819
TOLERANCES UNLESS OTHERWISE SPECIFIED

0" TO 2'-0" +/-1/16"	X.X" +/-0.1"
2'-0" TO 4'-0" +/-1/8"	X.XX" +/-0.03"
4'-0" TO 7'-0" +/-3/16"	X.XXX" +/-0.015"
OVER 7'-0" +/-1/4"	
ANGLES GENERAL PLATEWORK	+/-1/2°
TUBE SHIELDS	+/- 1°

Proj. no | Proj. name | Item ID: POWP118084

Title: FABRICATION DETAIL - OVERFLOW SPRAY NOZZLE

Code | Info | Doc. id.: MF00646923 | Sheet: 1/1 | Revision: 1

Status: Certified for Fabrication

E:\CAD_Vault\Library\Product Library\GOOD\Product\QLIQUIFIER\Overflow\1\1829055